DRAWING MADE IN THIRD ANGLE PROJECTION

THIS DRAWING IS UNPUBLISHED. RELEASED FOR PUBLICATION ,19 .
© COPYRIGHT 19 BY AMP INCORPORATED. ALL INTERNATIONAL RIGHTS RESERVED.

LOC	DIST	P	F
DF	XO		

REVISIONS

ZONE	LTR	DESCRIPTION	DATE	APPD
	0	RELEASED NPR 90-0068	3-5-90	PY

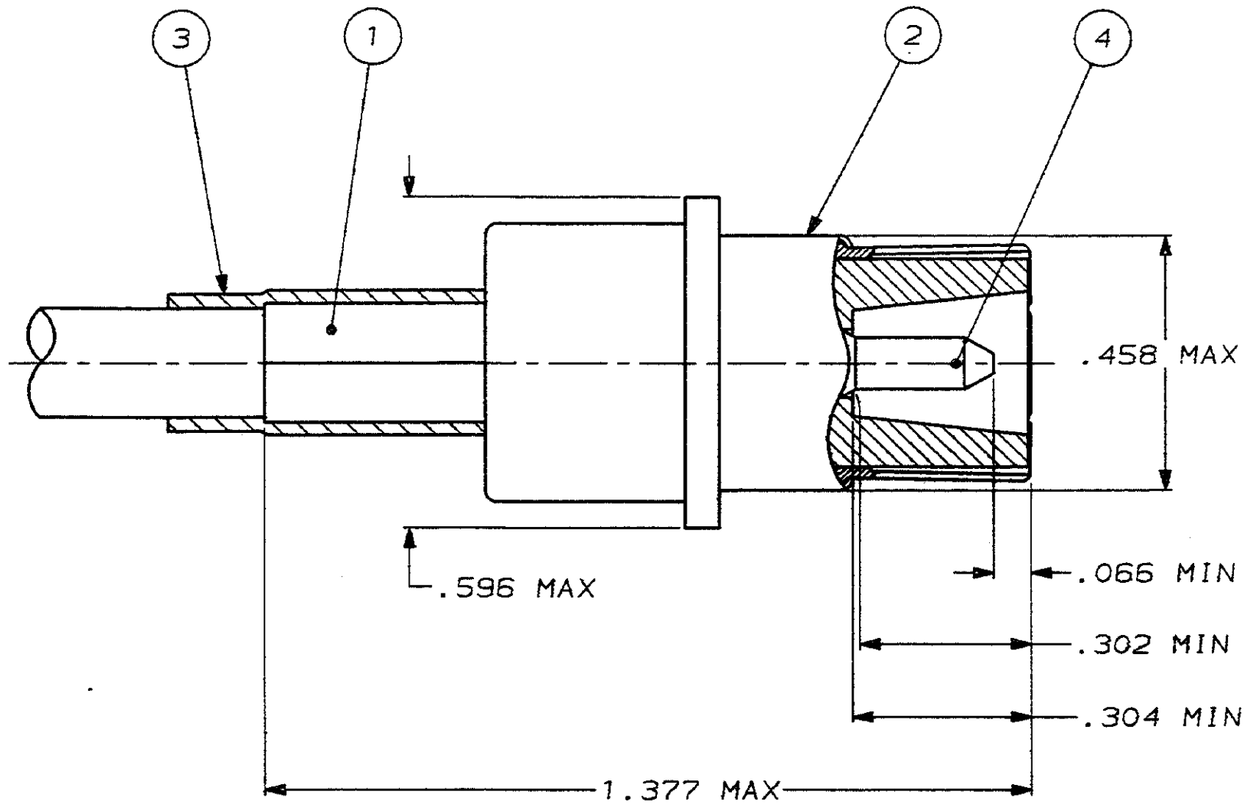

1. FOR USE WITH RG-142/U CABLE
2. BRAID CRIMP:USE MILITARY TOOL M22520/5-01, WITH DIE SET M22520/5-11,CAVITY A OR EQUIVALENT
3. CENTER CONTACT CRIMP:USE MILITARY TOOL M22520/5-01, WITH DIE SET M22520/5-11,CAVITY B OR EQUIVALENT

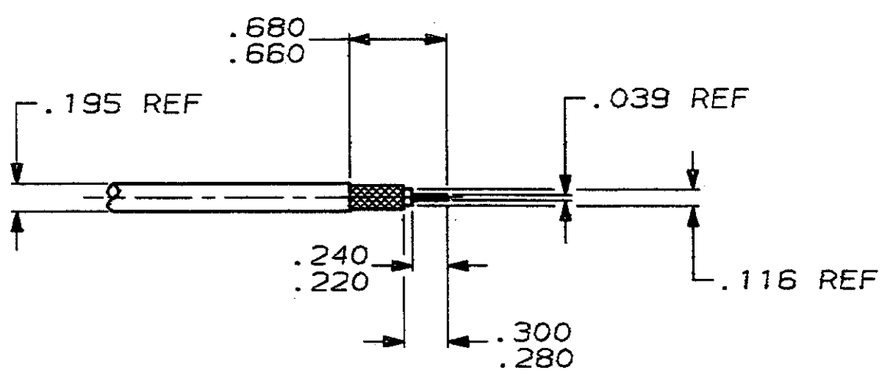

RECOMMENDED STRIP LENGTH
SCALE 1:1

QTY	PART NO	DESCRIPTION	ITEM NO
1	447113-1	CONTACT ASSEMBLY	4
1	228143-2	HEAT SHRINK TUBING	3
1	447112-1	PIN ASSEMBLY	2
1	446556-3	FERRULE	1

DO NOT SCALE PRINT.
UNLESS SPECIFIED
DIMENSIONS IN INCHES
TOLERANCES ON :
2 PLC DEC ± -
3 PLC DEC ± .005
ANGLES ± -

MATERIAL -

FINISH -

DR P. YEAGER 2-13-90
CHK J. CABARLO 2-26-90
APPD R. HOSLER 2-28-90
APPD * *
PRODUCT SPEC -
APPLICATION SPEC -
WEIGHT -

AMP | AMP INCORPORATED Harrisburg, Pa. 17105

NAME COAXIAL CONTACT, PIN, SIZE 1

SIZE C | FSCM NO 00779 | DRAWING NO 447095-3

SCALE 4:1 | SHEET 1 OF 1

CUSTOMER DRAWING

AMP 1471-6 REV 3-87

13 FEB 1990 13:35:24 Y05887 <UT128B>DEPTRA2C>U.RF>U.SIZE1